Rev	AWO #	Description	Date	Appr
-		RELEASED	6/03/10	

APPROVED: _____

DATE: _____ TITLE: _____

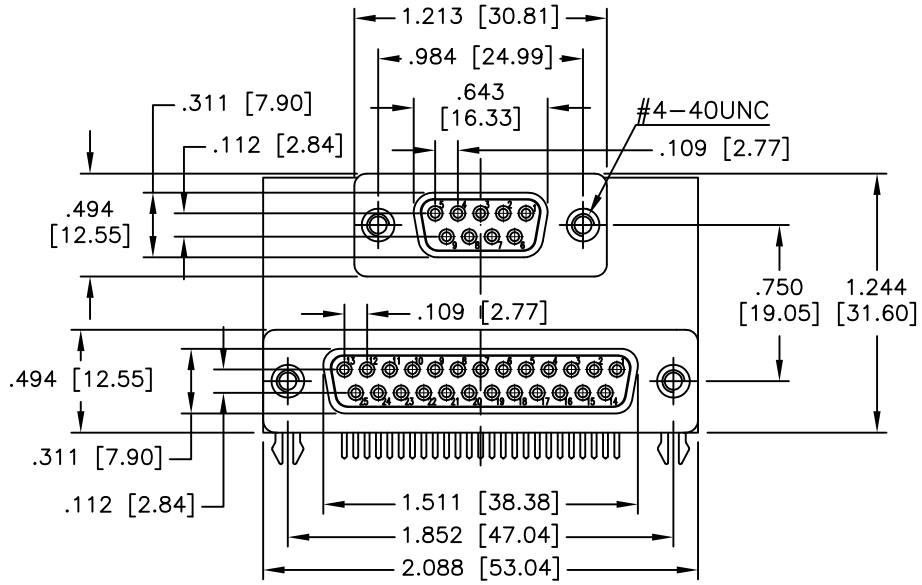

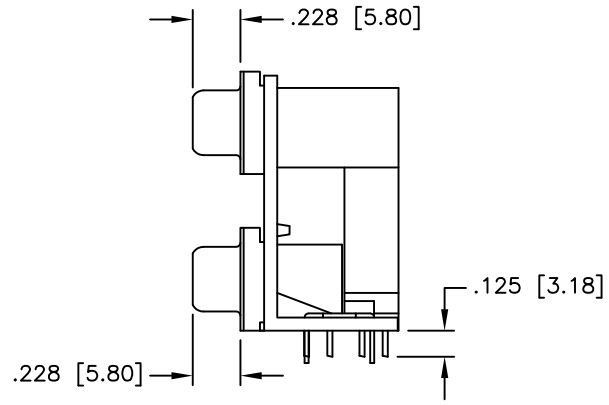

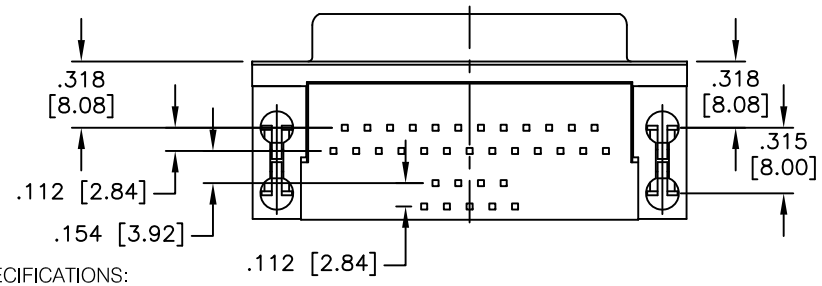

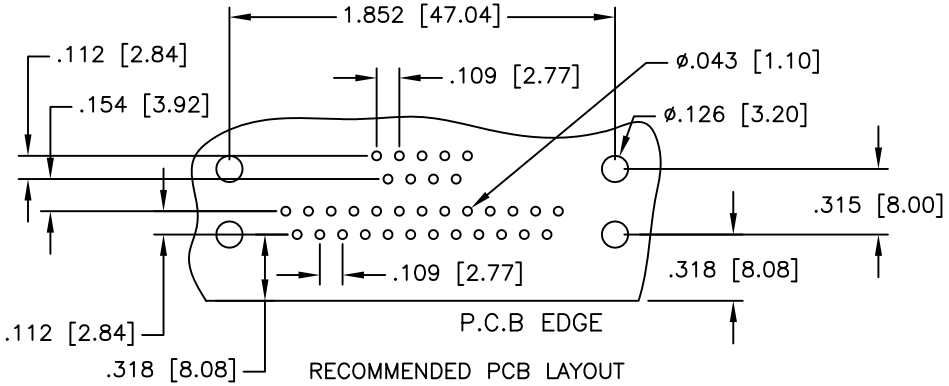

SPECIFICATIONS:
Material:
Insulator: PBT, rated UL 94V-0
Insulator color: Black
Contacts: Copper Alloy
Shell: SPCC, Nickel plated
Plating:
Gold flash over Nickel underplate on contact area,
Tin over Nickel underplate on solder tails.
Electrical:
Current rating: 3 Amps max.
Contact resistance: 25 mohms max. initial
Insulation resistance: 5,000 Mohms min.
Dielectric withstanding voltage: 1,000 VAC for 1 minute
Temperature Rating:
Operating temperature: -55°C to +85°C
Environmental:
Lead free, RoHS compliant
Recommended soldering temp: 235°C for 5 seconds

RoHS COMPLIANT

UNLESS OTHERWISE SPECIFIED
ALL DIMENSIONS ARE INCHES [MM]
TOLERANCES: EXCEPT AS NOTED

INCHES		HOLES	
.X	± .10	Ø.X	±.10
.XX	± .020	Ø.XX	±.015
.XXX	± .015	Ø.XXX	±.010

APPROVALS		DATE
DRAWN	DY	6/03/10
CHECKED		
APPROVED		

ADAM TECH
909 Rahway Avenue, Union, NJ 07083
Phone: 908-687-5000 Fax: 908-687-5710

TITLE
DUAL PORT D-SUB, 09 FEMALE /25 EMALE

SIZE	PART NO.	REV.
X	DPD-09/25-00-B3	-

REF: S00027T | SCALE: NTS | SHEET 1 OF 1