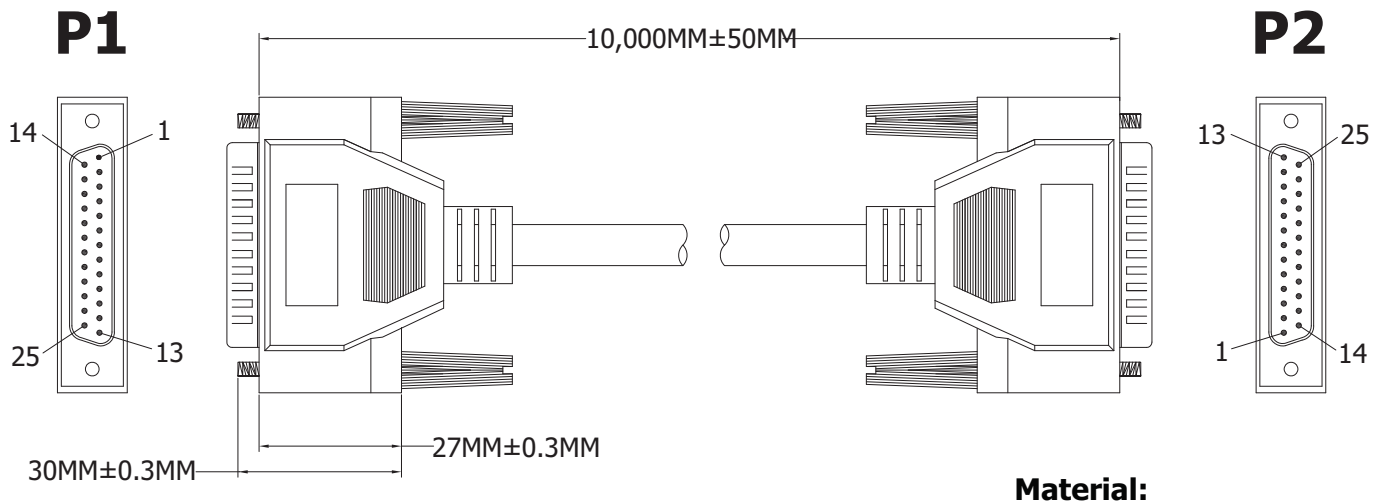

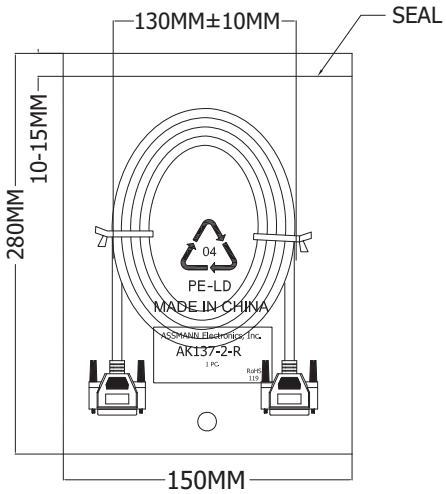

PIN ASSIGNMENT

P1		P1
1	BLACK	1
2	BROWN	2
3	RED	3
4	ORANGE	4
5	YELLOW	5
6	GREEN	6
7	BLUE	7
8	PURPLE	8
9	GRAY	9
10	WHITE	10
11	PINK	11
12	LIGHT/GREEN	12
13	RED/BLACK	13
14	ORANGE/BLACK	14
15	YELLOW/BLACK	15
16	GREEN/BLACK	16
17	BLUE/BLACK	17
18	PURPLE/BLACK	18
19	WHITE/BLACK	19
20	RED/WHITE	20
21	ORANGE/WHTIE	21
22	GREEN/WHITE	22
23	BLUE/WHITE	23
24	PURPLE/WHITE	24
25	BROWN/WHITE	25
SHELL	DRAIN	SHELL

Material:

- Cable: NOUL 28AWG*25C+D+AL/MY
  - OD: 6.5MM
  - Color: Beige
- Connectors: DB 25 Pin Soder Type
  - Pin G/F
  - Shell: Ni-Plated
  - Insulator Color: Blue
- Inner Jacket: Clear LD-PE
- Outer Jacket: PVC 40P (Beige)
- Screw: #4-40UNC Type, Nickel Plated

Electrical:

- 100% Open short & mis wire test
- Contact Resistance: 5Ω Max.
- Insulation Resistance: 10Ω Min.
- Hi-Pot: 300V DC / 10MS

RoHS Complaint

Scale	1:1
TOLERANCE	
X.X	±0.40
X.XX	±0.25
X.XXX	±0.15
Angle	±3°

Modification	Date	Name

		Name
Drawn	11.14.11	Chappell
Approved		

ASSMANN WSW components

Item No.

AK164-10-R

Title: Serial / Parallel Connection Cable, 25 Pin Male <=> 25 Pin Male, 10 Meters

Drawing No.

rev00

Replace

Sheet