BOLYMIN

BO9864A

Feature

1. FSTN LCD, COG Package
2. Bulit-in controller SSD1815
3. +3V Power Supply
4. 1/64 Duty
5. Option: LED Backlight

Mechanical Data

Item	Standard Value	Unit
Module Dimension	37.0 x 33.0	mm
Viewing Area	34.0 x 22.2	mm
Dot Size	0.28 x 0.28	mm
Dot Pitch	0.30 x 0.30	mm

Pin Assignment

Pin	Symbol	Pin	Symbol	Pin	Symbol
1	VDD	11	Cap1N	21	DB2
2	C86	12	Cap1P	22	DB1
3	VSS	13	Vap3N	23	DB0
4	VL6	14	Vee	24	E($\overline{RD}$)
5	VL5	15	Vss	25	R/$\overline{W}$($\overline{WR}$)
6	VL4	16	DB7	26	DC
7	VL3	17	DB6	27	RES
8	VL2	18	DB5	28	$\overline{CS}$
9	Cap2P	19	DB4	29	NC
10	Cap2N	20	DB3	30	NC

Electronic Characteristics

Item	Symbol	Condition	Typical Value	Unit
Input Voltage	Vdd	Vdd = +3.0V	3.0	V
Supply Current	Idd	Vdd = +3.0V	18	mA
LCD Driving Voltage	VLCD	Vdd - VL6	9.6	V
LCD Forward Voltage	Vf	25°C	2.0	V
LCD Forward Current	If	25°C	45	mA
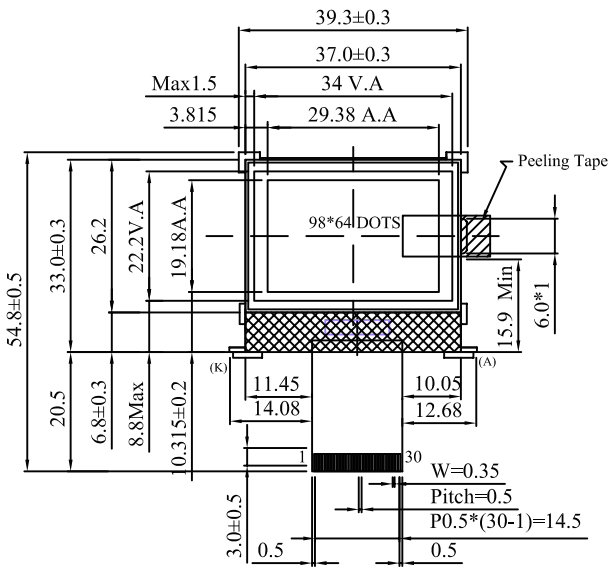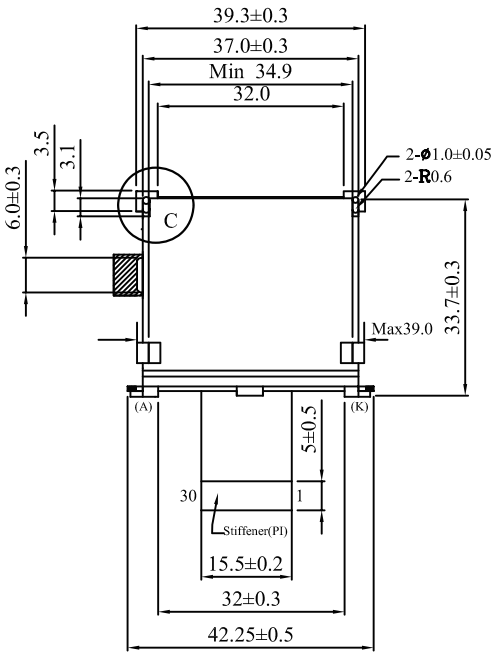
Dimension