PRODUCT NUMBER
SEE NOTE 1

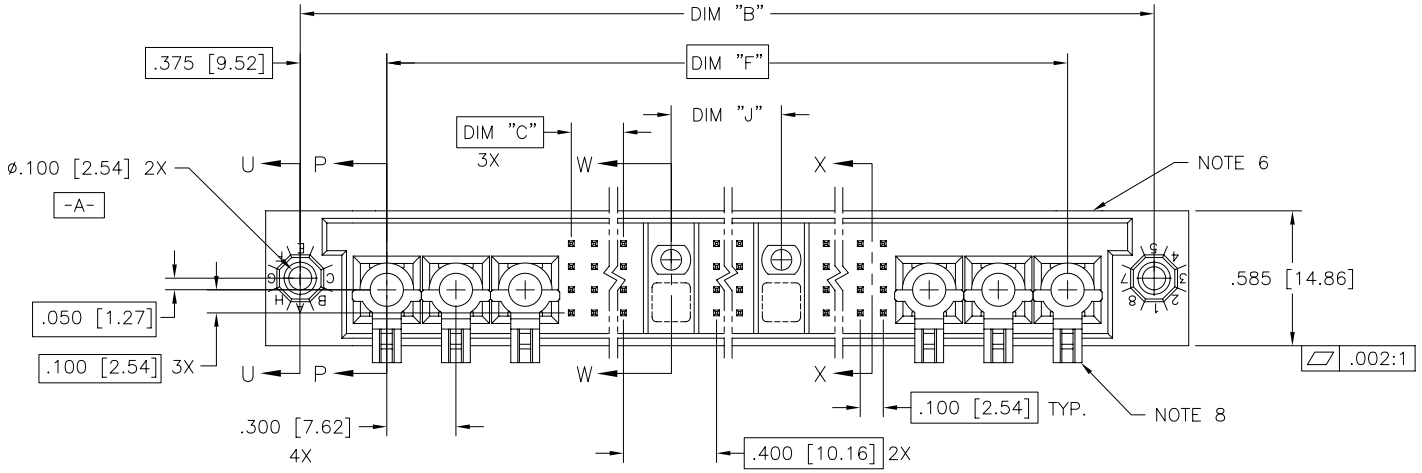

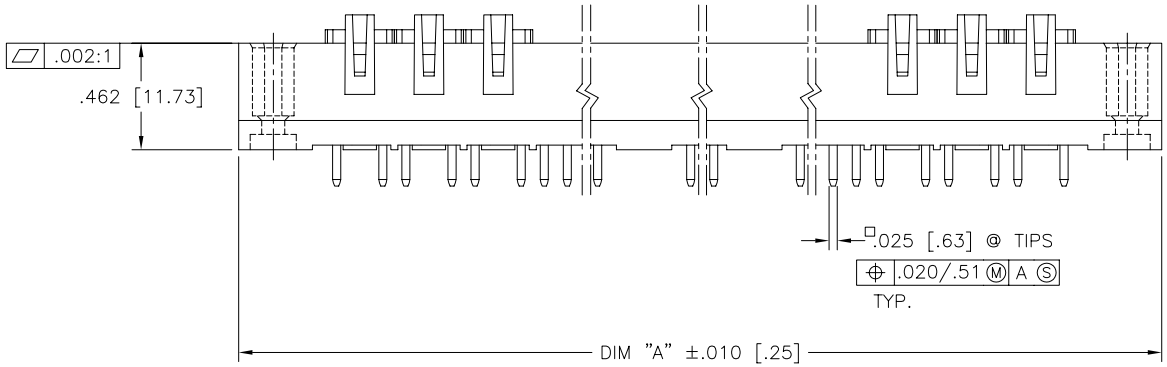

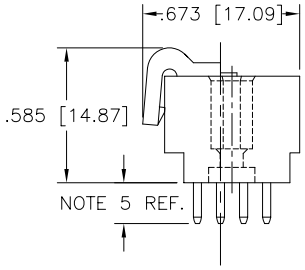

mat'l. code				surface	tolerance	projection	product family
NOTE 3				ISO 1302	ISO 406 ISO 1101		HPC
ltr	ecn no	dr	date	tolerances unless otherwise specified			title
A	V22185	RDS	5/11/92	angles	linear .XX±.01/.3	INCH/MM	4 ROW VERTICAL HEADER
B	V40264	PDP	1/14/94		.XXX±.005/.13		SOLDER TAIL, 2 G.P., 6 P.P.
C	V41237	GAH	8/17/94	0°±2°	.XXXX±.0020/.051	scale 1:1	
D	V91071	HTB	5/17/99	dr	D.SHEAFFER 5/1/92		dwg no sheet 1 of 2 size
E	V00274	JWS	2/2/00	engr	S.CLARK 5/11/92		50546 A3
F	M06-0260	MHT	7/07/06	chr	S.CLARK 5/11/92		
				appd	S.CLARK 5/11/92		type Product Customer Drawing
sheet index	revision	F	F				
	sheet	1	2				

form: A3

FCIconnect.com
Copyright FCI

PDM: Rev:F STATUS: Released Printed: May 13, 2011

PRODUCT NUMBER	DIM.	LENGTH FORMULAS
SEE NOTE 1	DIM "A"	.100/2.54 x NO. OF COLUMNS +3.15/80.0
	DIM "B"	.100/2.54 x NO. OF COLUMNS +2.850/72.39
	DIM "C"	.100/2.54 x NO. OF COLUMNS DIVIDED BY 3 −.100/2.54
	DIM "F"	.100/2.54 x NO. OF COLUMNS +2.100/53.34
	DIM "J"	.100/2.54 x NO. OF COLUMNS DIVIDED BY 3 +.300/7.62

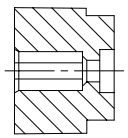

SECTION U–U

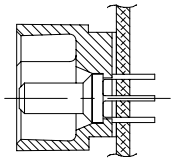

DETAIL P
(INSTALLED IN
PCB, NOTE 8)

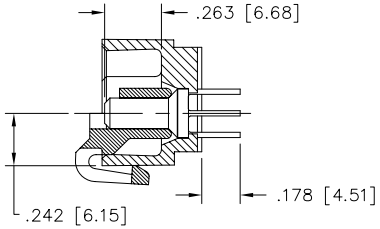

SECTION P–P
(W/LOCATOR,
SEE DETAIL P)

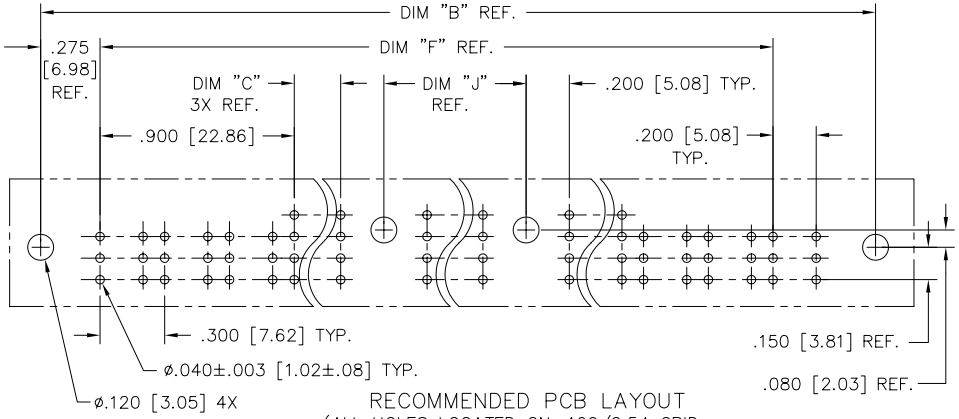

RECOMMENDED PCB LAYOUT
(ALL HOLES LOCATED ON .100/2.54 GRID
UNLESS OTHERWISE SPECIFIED)

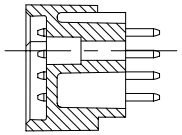

SECTION W–W

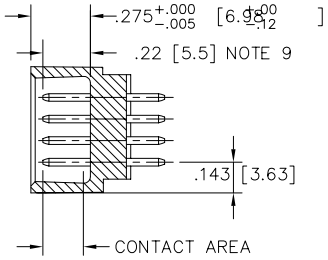

SECTION X–X

NOTES:

1. PRODUCT NUMBERING CODE:
   50546 – X YYY Z
   - Z: TAIL LENGTH (NOTE 5)
   - YYY: NO. OF POSITIONS (NOTE 2)
   - X: PLATING (NOTE 4)
   - 50546: BASE NUMBER

   PRODUCT NUMBERING CODE FOR SELECT LOAD PART NUMBERS:
   50546 – XXYYY
   - YYY: SEQUENCE NUMBER
   - XX: ALWAYS 'XX'
   - 50546: BASE NUMBER

2. THIS PRODUCT IS CONFIGURED IN SIZES OF 30 thru 132 COLUMNS IN INCREMENTS OF THREE.
   i.e.: 30,33,36,39,.....129,132.

3. HOUSING MATERIAL: GLASS AND MINERAL FILLED HIGH TEMP. THERMOPLASTIC. FLAME RETARDANT PER UL94V–0. COLOR: BLACK.
   PIN MATERIAL: PHOS BRONZE

4. PLATING CONTACT AREA OPTIONS:
   A = 50u" Ni UNDER ALL WITH 30u" Au ON CONTACT AREA, SnPb ON PCB INTERFACE AND Au FLASH ON ALL OTHER AREAS.

5. TAIL LENGTH OPTIONS: (±.015/.38)
   A = .177/4.5
   J = .120/3.05

6. MANUFACTURE'S NAME, PART NUMBER AND LOT CODE TO APPEAR ON THIS SURFACE PER BUS–12–108.

7. FOR DOCUMENTATION MENU, SEE BUS–01–057.

8. POWER PIN LOCATOR (REF. 50234) TO BE REMOVED AFTER SOLDERING.

9. REFERENCE 50803 FOR F.M.L.B. OPTIONS AND WORKSHEET.

mat'l. code				surface ISO 1302 √	tolerance ISO 406 ISO 1101	projection	product family HPC
ltr	ecn no	dr	date	tolerances unless otherwise specified			title
F				angles	linear .XX±.01/.3 .XXX±.005/.13 .XXXX±.0020/.051	INCH/MM	4 ROW VERTICAL HEADER SOLDER TAIL, 2 G.P., 6 P.P.
				0°±2°		scale 1:1	
				dr	D.SHEAFFER 5/1/92	FCI	dwg no 50546 sheet 2 of 2 size A3
				engr	S.CLARK 5/11/92		
				chr	S.CLARK 5/11/92		
				appd	S.CLARK 5/11/92		type Product Customer Drawing
sheet index	revision sheet						

form: A3

FCIconnect.com
Copyright FCI

PDM: Rev:F STATUS: Released Printed: May 13, 2011