RED INDICATES ORIGINAL

DWG SIZE	DATA CONTAINED IN THIS DOCUMENT IS PROPRIETARY TO TROMPETER ELECTRONICS INC. AND SHALL NOT BE DISCLOSED, COPIED OR USED FOR PROCUREMENT OR MANUFACTURE WITHOUT EXPRESS WRITTEN PERMISSION.
C	

REVISIONS			305-1072		SH 1
REV	ED	DESCRIPTION	DWN	APPROVED	DATE
A		PRODUCTION RELEASE	DKC		

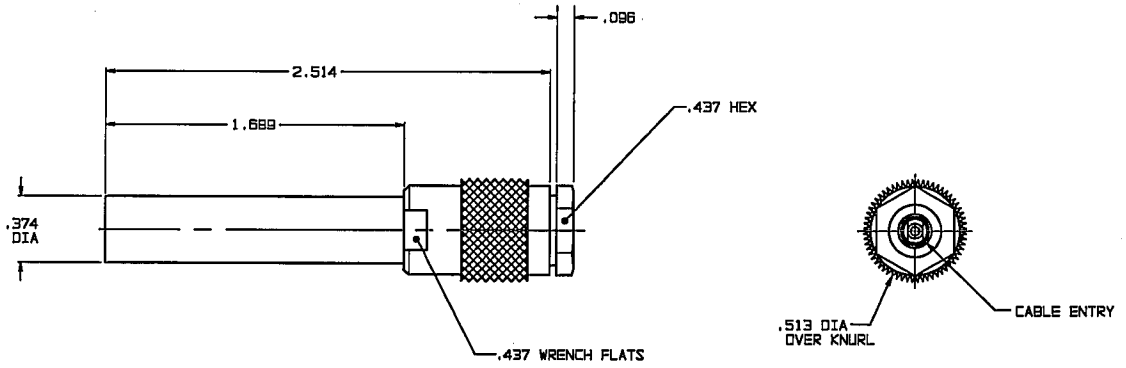

FIG 1

INCH	MM
.005	0.13
.096	2.44
.374	9.50
.437	11.10
.513	13.03
1.689	42.90
1.864	47.35
2.514	63.86

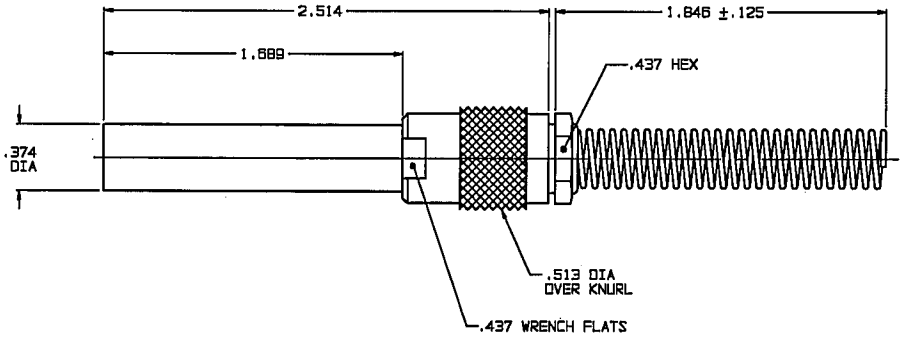

FIG 2

BEND RELIEF
VERSION SHOWN
4

6. ASSEMBLE PER TAI-171
5. EXAMPLE OF PART NO:
   305-1072 BR
   BASIC PART NO — 4
4. IF BEND RELIEF SPRING IS REQUIRED (FIG 2) ADD SUFFIX "BR" TO PART NO.
3. CONCENTRIC TWINAXIAL/TRIAXIAL PATCH PLUG FOR RAYCHEM CABLE 10605
2. FINISH: TFS-1A (NICKEL)
1. ALL DIMENSIONS SHALL BE IN INCHES

QTY	DESCRIPTION			PART NUMBER	ITEM
TOL UNLESS SPECIFIED .XX ± .XXX ±.005 .XXXX± ANGLES±	TROMPETER ELECTRONICS, INC.			PL71L / BR SPECIAL -10605	
DWN	DKC	5-18-96	MATERIAL	CODE IDENT	DRAWING NO.	REV
CHK	BM	5-26-96	—	14949	305-1072	A
ENGR						
APPR		6/21/96	SCALE 2/1	DATE 6/27/96	SHEET 1 OF 2	

NEXT ASSY