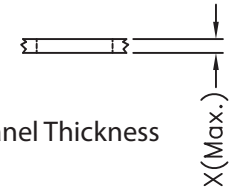

Screw L=5.0 For Panel Thickness
Under 1.2 mm

Screw L=6.0 For Panel Thickness
Between 1.2~2.0mm

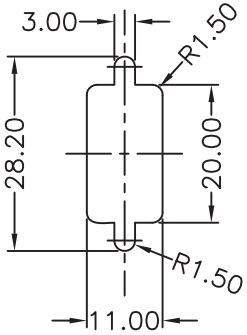

Recommended Panel Cut-Out

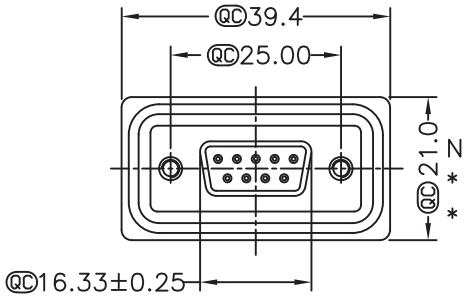

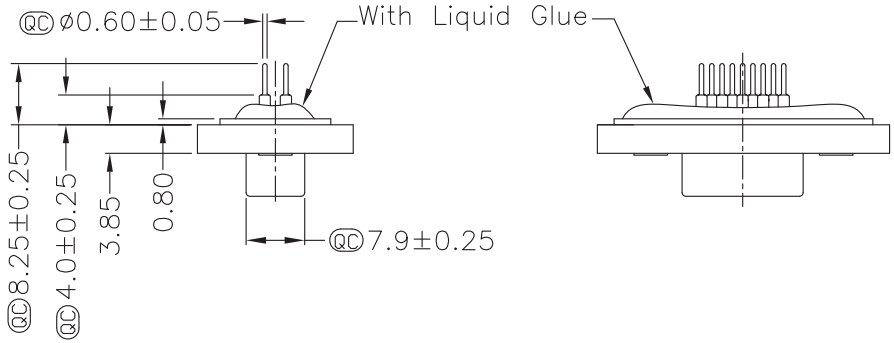

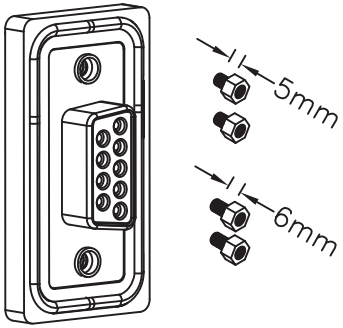

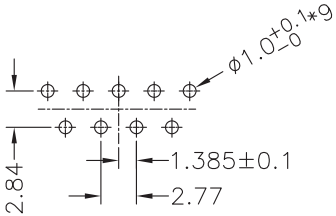

9 Pin Female Connector
PCB Pin Layout
Scale 2:1

Material:

- Waterproof Rate: IP68
  - IP68: 1M of depth of water 24 hours
  - Do Mating Test After Glued
- D-Sub Connector: Black Core, PBT
- Plastic Jacket: Black, Nylon+GF
- Pin: Copper Alloy, Gold Plated
- Ring: Light Blue, Silicone
- Screw: Copper Alloy, Nickel Plated, #4-40 UNC
- The 180° Board Lock Needs To Connect The Iron Shell 180°

QC Quality Control: Important Dimension to check
Unit: MM±0.1MM

Scale	1:1
TOLERANCE	
X.X	±0.40
X.XX	±0.25
X.XXX	±0.15
Angle	±3°

Modification	Date	Name

		Name
Drawn	11.19.11	Chappell
Approved	11.19.11	Waldmann

Item No.
A-DF09PP-WP-R

Title
Waterprood D-Sub Connector -
Straight Pin, for PCB Mount, 9 Contacts Female

Drawing No.
rev01

Replace
Sheet

RoHS Complaint

ASSMANN WSW components