www.DataSheet4U.com

# 字高15mmH 4桁クロック用LED数字表示素子
# 15mmH 4Digits LED Numeric Displays for Clock

Ta=25°C

| 外種名 Type No. Com.-Anode | Com.-Cathode | 外観結線図 Drawing No. | 色 Color Red | Green | 絶対最大定格 Absolute Maximum Ratings IF/seg mA | IFP/seg mA | VR/seg V | PD W | Topr °C | 推奨動作電流 IF/seg Recommend. mA | 電気的光学的特性 Optoelectric Characteristics VF Typ. | IF | Luminous Typ. μcd | Intensity IF mA | IR Max (VR=3v) μA | 波長 Peak Wave Length |
|---|---|---|---|---|---|---|---|---|---|---|---|---|---|---|---|---|
| SL-1493T | SL-1494T | L-42 | ○ | | 15 | — | 3 | 1.1 | −20~60 | 5~10 | 1.9 | 5 | 300 | 10 | 10 | 700 |
| ※SL-1497T | SL-1498T | L-43 | ○ | | — | 30 | 3 | 1.1 | −20~60 | 10~20 | 1.9 | 5 | 300 | 20 | 10 | 700 |
| ＊SL-1459L | SL-1450L | L-44 | ○ | | 15 | 60 | 3 | 1.1 | −20~60 | 5~10 | 1.9 | 5 | 700 | 5 | 10 | 700 |
| SL-2459G | SL-2450G | L-44 | | ○ | 30 | — | 3 | 2.3 | −20~60 | 10~20 | 2.05 | 15 | 1300 | 15 | 10 | 565 |
| SL-1423P | SL-1424P | L-45 | ○ | | 20 | — | 3 | 1.4 | −20~60 | 5~15 | 1.9 | 5 | 200 | 5 | 10 | 700 |
| | SL-2424 | L-45 | | ○ | 30 | — | 3 | 2.2 | −20~60 | 10~20 | 2.05 | 15 | 250 | 15 | 10 | 565 |
| SL-1499L | SL-1490L | L-46 | ○ | | 15 | — | 3 | 1.1 | −20~60 | 5~10 | 1.9 | 5 | 1000 | 10 | 10 | 700 |
| SL-2499G | SL-2490G | L-46 | | ○ | 30 | — | 3 | 2.2 | −20~60 | 10~20 | 2.05 | 15 | 1400 | 15 | 10 | 565 |
| SL-1447 | | L-47 | ○ | | 15 | — | 3 | 1.2 | −20~60 | 5~10 | 1.9 | 5 | 200 | 5 | 10 | 700 |
| SL-2447 | | L-47 | | ○ | 30 | — | 3 | 2.0 | −20~60 | 10~15 | 2.05 | 15 | 350 | 15 | 10 | 565 |

＊Pulse width=1ms. Duty Ratio $\frac{1}{4}$ ※ Duty Ratio $\frac{1}{2}$ : duplex drive $I_{FP}$: $I_F$ Pulsed=Pulsed Forward Current

www.DataSheet4U.com

## 用　途

クロック表示（置時計等）

周波数クロック表示（オーディオ用等）

## APPLICATIONS

Time indication (Clock, etc.)

Clock Frequency indication (Audio devices, etc.)

### L—42　SL-1493T 1494T

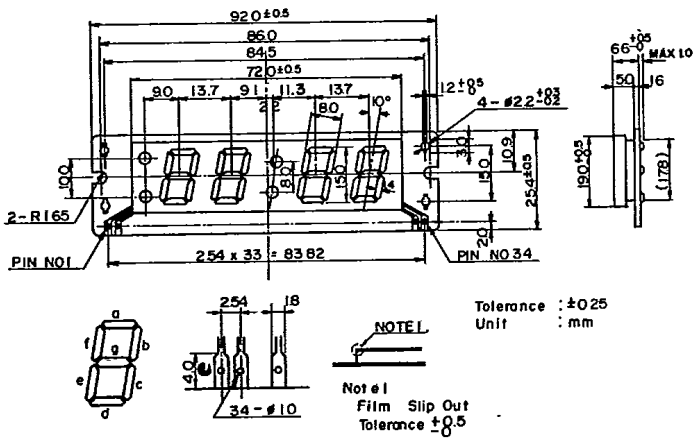


| PIN NO | ADDRESS | PIN NO | ADDRESS | PIN NO. | ADDRESS |
|---|---|---|---|---|---|
| 1 | Common Cathode | 13 | Hour A Anode | 25 | 10'S Min E Anode |
| 2 | PM Anode | 14 | " B " | 26 | " C " |
| 3 | AM " | 15 | " E " | 27 | Min F " |
| 4 | 10'S Hour A " | 16 | " D " | 28 | " G " |
| 5 | " F " | 17 | " C " | 29 | " A " |
| 6 | " G " | 18 | Upper Colon " | 30 | " B " |
| 7 | " E " | 19 | Lower Colon " | 31 | " E " |
| 8 | " D " | 20 | 10'S Min. F " | 32 | " D " |
| 9 | " C " | 21 | " G " | 33 | " C " |
| 10 | " B " | 22 | " A " | 34 | Common Cathode |
| 11 | Hour F " | 23 | " B " | | |
| 12 | " G " | 24 | " D " | | |

Com. Cathode SL − 1494

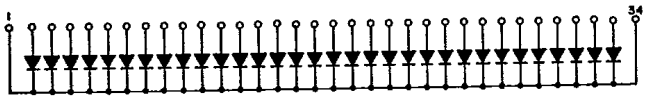

LSI 1493 MM5402(NS)
1494 LM8361, 8363, 8364 ＊＊(東三)

### L—43　SL-1497T 1498T

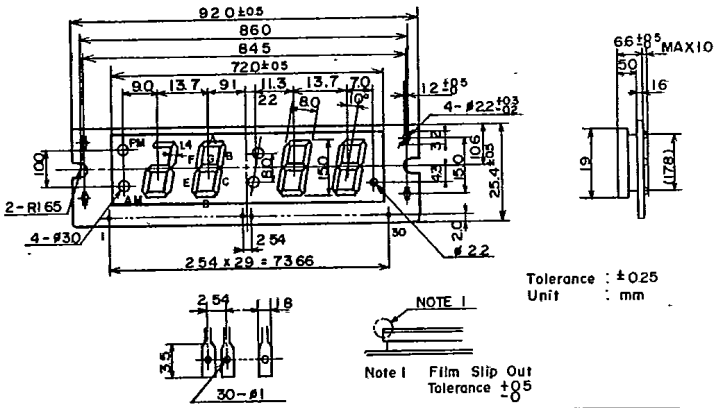


| PIN NO. | ADDRESS | PIN NO. | ADDRESS | PIN NO | ADDRESS |
|---|---|---|---|---|---|
| 1 - 29 | PM, 10'S Hour A, D Unit Hour D, E, F, G Colon, 10'S Min. A, B, C & Unit Min. D, E, F, G Common Anode | 6 | 10'S Hour B Cathode | 16 | 10'S Min. B G Cathode |
| | | 7 | " A G " | 17 | " C D " |
| | | 8 | " D E " | 18 | 10'S Min E & Unit Min. E Cathode |
| 2 - 26 | 10'S Hour B, C, E, G Unit Hour A, B, C, 10'S Min. D, E, F, G Unit Min. A, B, C Common Anode | 9 | 10'S Hour C & Unit Hour E Cathode | 19 | Unit B G Cathode |
| | | 10 | Unit Hour B.G Cathode | 20 | Unit Min. C D Cathode |
| | | 11 | N. C | 21 | " A F " |
| | | 12 | Unit Hour C D Cathode | 22, 23, 24, 25 | N C |
| 3 | AM Common Anode | 13 | " A F " | 27 | Sleep Cathode |
| 4 | AM Cathode | 14 | N C | 28 | Sleep Common Anode |
| 5 | PM Cathode | 15 | 10'S Min. A F Cathode | 30 | Colon Cathode |

Com. Anode SL − 1497

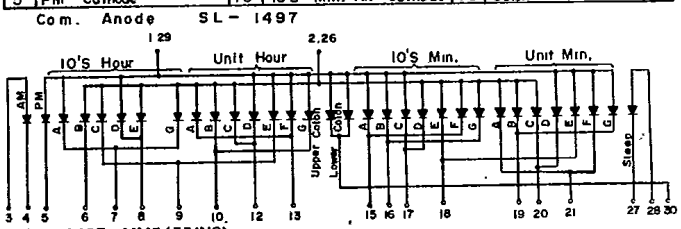


LSI 1497 MM5455(NS)
1498 LM8560 ＊(東三)

＊＊TOKYO SANYO ELECTRIC CO., LTD.

www.DataSheet4U.com
www.DataSheet4U.com
www.DataSheet4U.com
www.DataSheet4U.com
www.DataSheet4U.com
DataSheet4U.com

www.DataSheet4U.com

## L—44

SL-1459L, 1450L
SL-2459G, 2450G

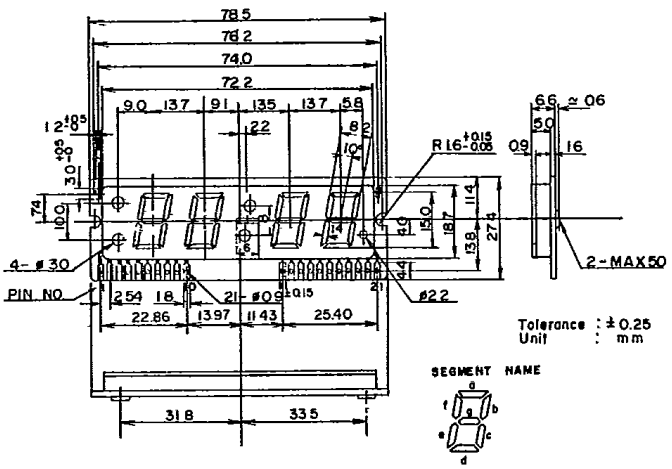


| PIN NO | ADDRESS | PIN NO | ADDRESS |
|---|---|---|---|
| 1 | AM Anode | 12 | Minus Anode |
| 2 | AM, PM Cathode | 13 | Colon Common Cathode |
| 3 | PM Anode | 14 | d Anode |
| 4 | f " | 15 | c " |
| 5 | Unit Hour Common Cathode | 16 | Unit Minute Common Cathode |
| 6 | g Anode | 17 | Alarm Anode |
| 7 | 10's Hour Common Cathode | 18 | Alarm Cathode |
| 8 | e Anode | 19 | b Anode |
| 9 | Upper Colon Anode | 20 | 10's Minute Common Cathode |
| 10 | Lower " " | 21 | a Anode |
| 11 | Minus Cathode | | |

Com. Cathode SL-1450L

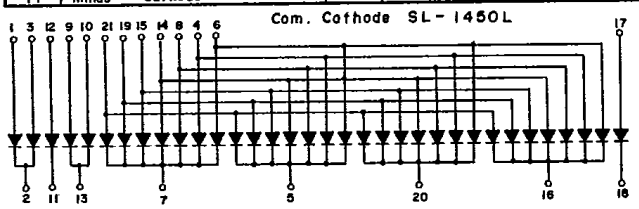

## L—45

SL-1423P, 1424P
SL-2424

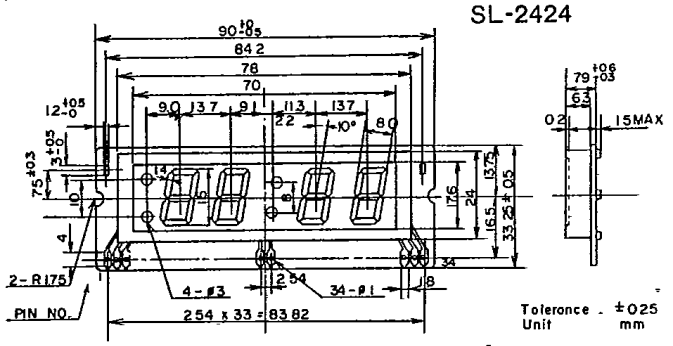


| PIN NO | ADDRESS | PIN NO | ADDRESS | PIN NO | ADDRESS |
|---|---|---|---|---|---|
| 1 | Colon (left) Common Anode | 13 | Hour A Cathode | 25 | 10's Min E Cathode |
| 2 | PM Cathode | 14 | " B " | 26 | " C " |
| 3 | AM " | 15 | " E " | 27 | Minute F " |
| 4 | 10's Hour A Cathode | 16 | " D " | 28 | " G " |
| 5 | " F " | 17 | " C " | 29 | " A " |
| 6 | " G " | 18 | Upper Colon Cathode | 30 | " B " |
| 7 | " E " | 19 | Lower Colon Cathode | 31 | " E " |
| 8 | " D " | 20 | 10's Min F Cathode | 32 | " D " |
| 9 | " C " | 21 | " G " | 33 | " C " |
| 10 | " B " | 22 | " A " | 34 | Colon (right) Common Anode |
| 11 | Hour F " | 23 | " B " | | |
| 12 | " G " | 24 | " D " | | |

Com. Anode SL-1423

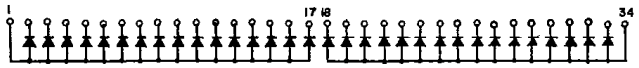

LSI 1423 : MM-5402
1424 : LM-8361, 8363, 8364 ＊(東三)
2424 : (LM-8361, 8363, 8364)

## L—46

SL-1499L, 1490L
SL-2499G, 2490G

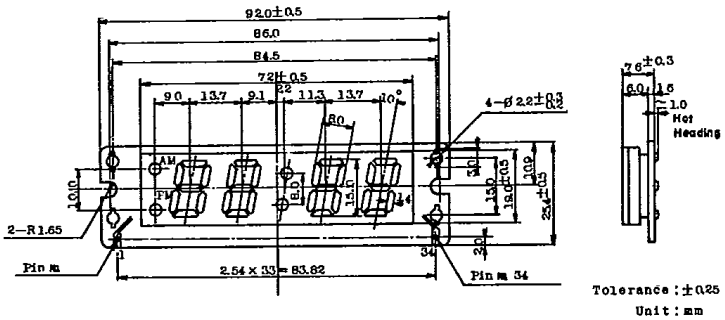


Segment Name

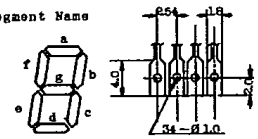


| Type | Fully Displayed Font |
|---|---|
| SL-1490-11L<br>SL-2490-11L | 18.88 |
| SL-1490-14L<br>SL-2490-14L | 88.88 |
| SL-1490-10L<br>SL-2490-10L | 88.88 |

Pin Connection

| Pin No | Address | Pin No | Address | Pin No | Address |
|---|---|---|---|---|---|
| 1 | Common per All | 13 | Unit Hour a | 25 | 10'S Min. e |
| 2 | PM dot | 14 | b | 26 | " c |
| 3 | AM dot | 15 | e | 27 | " f |
| 4 | 10'S Hour a | 16 | d | 28 | " g |
| 5 | " f | 17 | c | 29 | " a |
| 6 | " g | 18 | Upper Colon | 30 | " b |
| 7 | " e | 19 | Lower Colon | 31 | " e |
| 8 | " d | 20 | 10'S Min. f | 32 | " d |
| 9 | " c | 21 | " g | 33 | " c |
| 10 | " b | 22 | " a | 34 | Common per All |
| 11 | Unit Hour f | 23 | " b | | |
| 12 | " g | 24 | " d | | |

Common Cathode SL-1490-10L SL-2490-10L

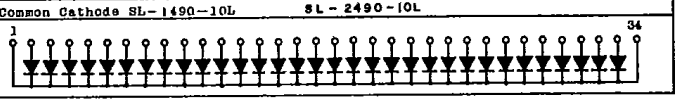

LSI 1499, 2499 : MM-5402
1490, 2490 : LM-8361, 8363, 8364 ＊(東三)

## L—47

SL-1447
SL-2447

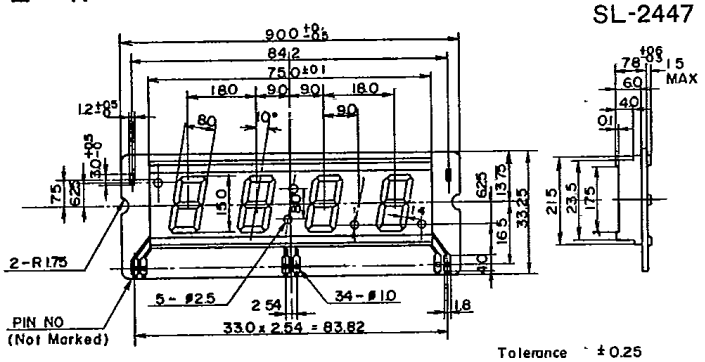


| PIN NO. | ADDRESS | PIN NO. | ADDRESS | PIN NO. | ADDRESS |
|---|---|---|---|---|---|
| 1 | Common Anode | 13 | Unit Hour d Cathode | 25 | 10'S Min b Cathode |
| 2 | dp 1 | 14 | " c " | 26 | Unit Min a " |
| 3 | 10'S Hour a Cathode | 15 | " g " | 27 | " f " |
| 4 | " f " | 16 | " b " | 28 | " e " |
| 5 | " e " | 17 | Lower Colon " | 29 | " d " |
| 6 | " d " | 18 | Upper Colon " | 30 | " c " |
| 7 | " c " | 19 | 10'S Min a Cathode | 31 | " g " |
| 8 | " g " | 20 | " f " | 32 | " b " |
| 9 | " b " | 21 | " e " | 33 | d·p 3 |
| 10 | Unit Hour a " | 22 | " d " | 34 | dp 2 |
| 11 | " f " | 23 | " c " | 35 | |
| 12 | " e " | 24 | " g " | 36 | |

Common Anode SL-1447, 2447

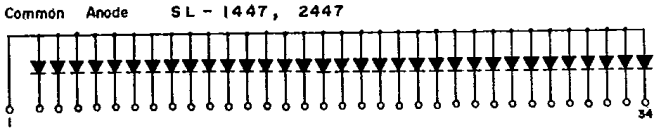

LSI 1447, 2447 : LC7250, 7265 ＊(東三)

＊ TOKYO SANYO ELECTRIC CO., LTD.

www.DataSheet4U.com
www.DataSheet4U.com
www.DataSheet4U.com
www.DataSheet4U.com
www.DataSheet4U.com
www.DataSheet4U.com