ETRI® Series 99Y

3,622” x 3,622” x 1,496” 92 x 92 x 38 mm

DC Axial Fans

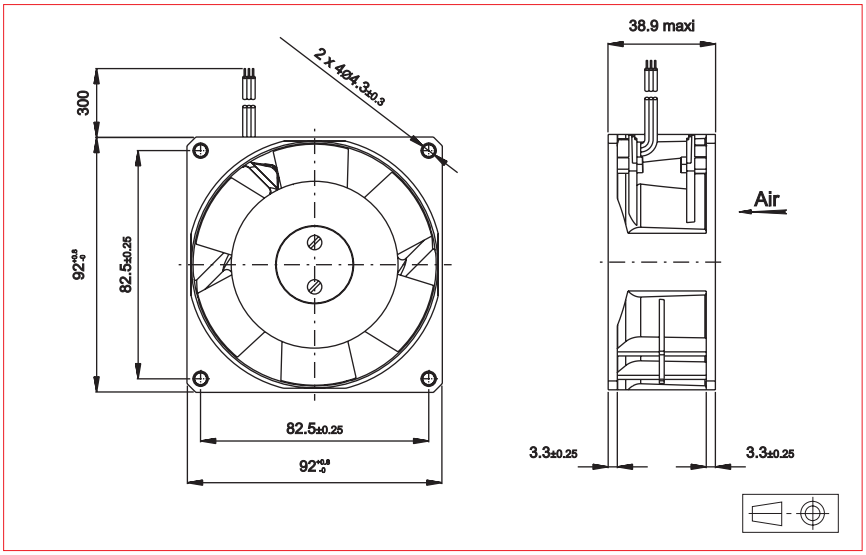

Approvals

CE

Life expectancy

L-10 LIFE AT 40°C:
25 000 hours

Brushless DC Motor

Electrical protection: impedance protected
Housing material: plastic UL 94 VO
Impeller material: plastic UL 94 VO
Weight: 370 g
Bearing system: ball bearings

Available with:

- Speed sensor
- Alarm

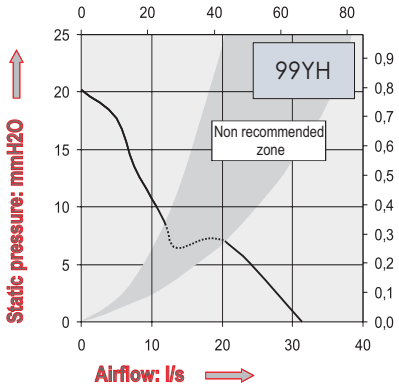

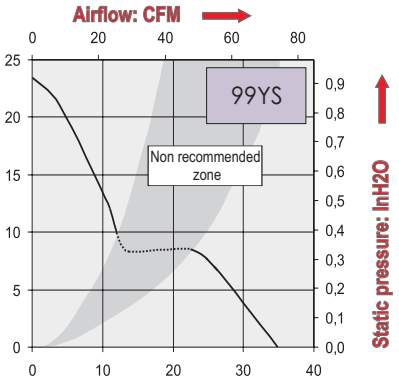

Part Number	Nominal voltage	Airflow	Noise level	Nominal speed	Input Power	Voltage range	Connection type		Operating temperature	
	V	l/s	dB(A)	RPM	W	V	Leads	Terminals	Min.°C	Max.°C
99YH2LP11000	24	31,4	52	5500	7,8	(21,6-26,4)	X		-40	85
99YS2LP11000	24	35,3	54,6	6060	11,7	(21,6-26,4)	X		-40	85

Additional versions:
Salt spray protected - shock and vibration protected - marine specifications
IP54: consult factory

Accessories:
Refer to Accessories leaflet

Non contractual document. Specifications are subject to change without prior notice. Pictures for information only. Edition 2008