70 MHz Bandpass SAW Filter

700 KHz Bandwidth

Complies with Directive 2002/95/EC (RoHS Compliant)

BP60380

Specifications					
Parameter	Sym	Minimum	Typical	Maximum	Unit
Center Frequency at 25°C	*fc*	69.93	70	70.07	MHz
Insertion Loss at fc	*IL*	-	18.0	23.0	dB
1 dB Bandwidth	BW_1	0.58	0.67	-	MHz
3 dB Bandwidth	BW_3	0.70	0.88	-	MHz
40dB Bandwidth	BW_{40}	-	1.8	2.0	MHz
Passband Variation	-	-	0.2	0.4	dB
Phase Linearity	-	-	4	6	Deg
Group Delay Variation	-	-	110	200	nsec
Absolute Delay	-	-	3.0	-	µsec
Ultimate Rejection	-	50	58	-	dB
Substrate Material	-	-	Quartz	-	-
Ambient Temperature	*Ta*	-	25	-	°C

Typical Performance

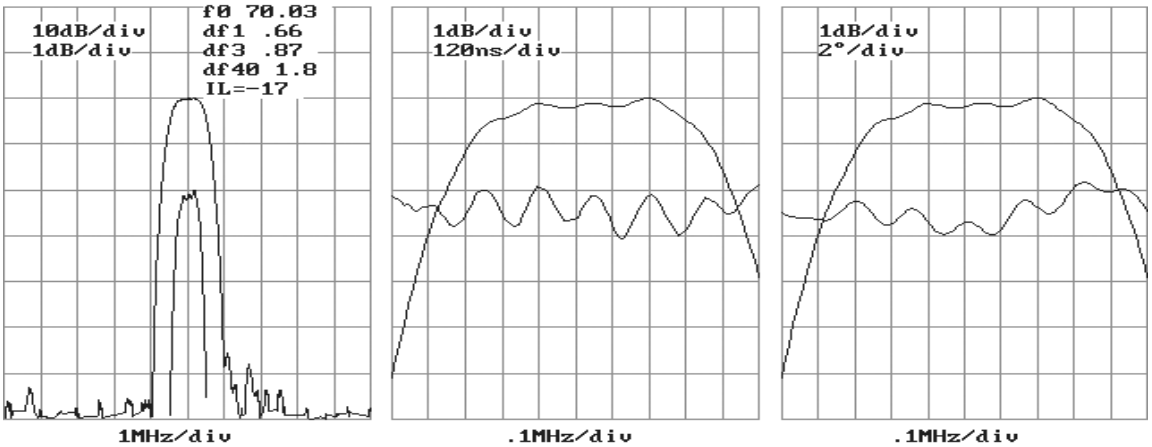

Package Outline

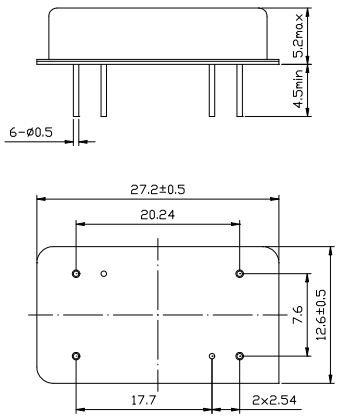

Matching Configuration

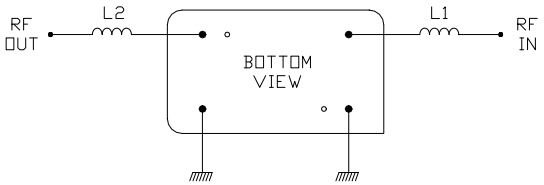

L1 = 270 nH L2 = 270 nH

Nominal Source/Load Impedance : 50 Ω

Note: Component values may change depending on board

Phone: +86 (10) 5820-3910 Fax: +86 (10) 5820-3915 Email: sales@vanlong.com Web: http://www.vanlong.com

© 2008 by Vanlong Technology Co., Ltd.